domino modul AG

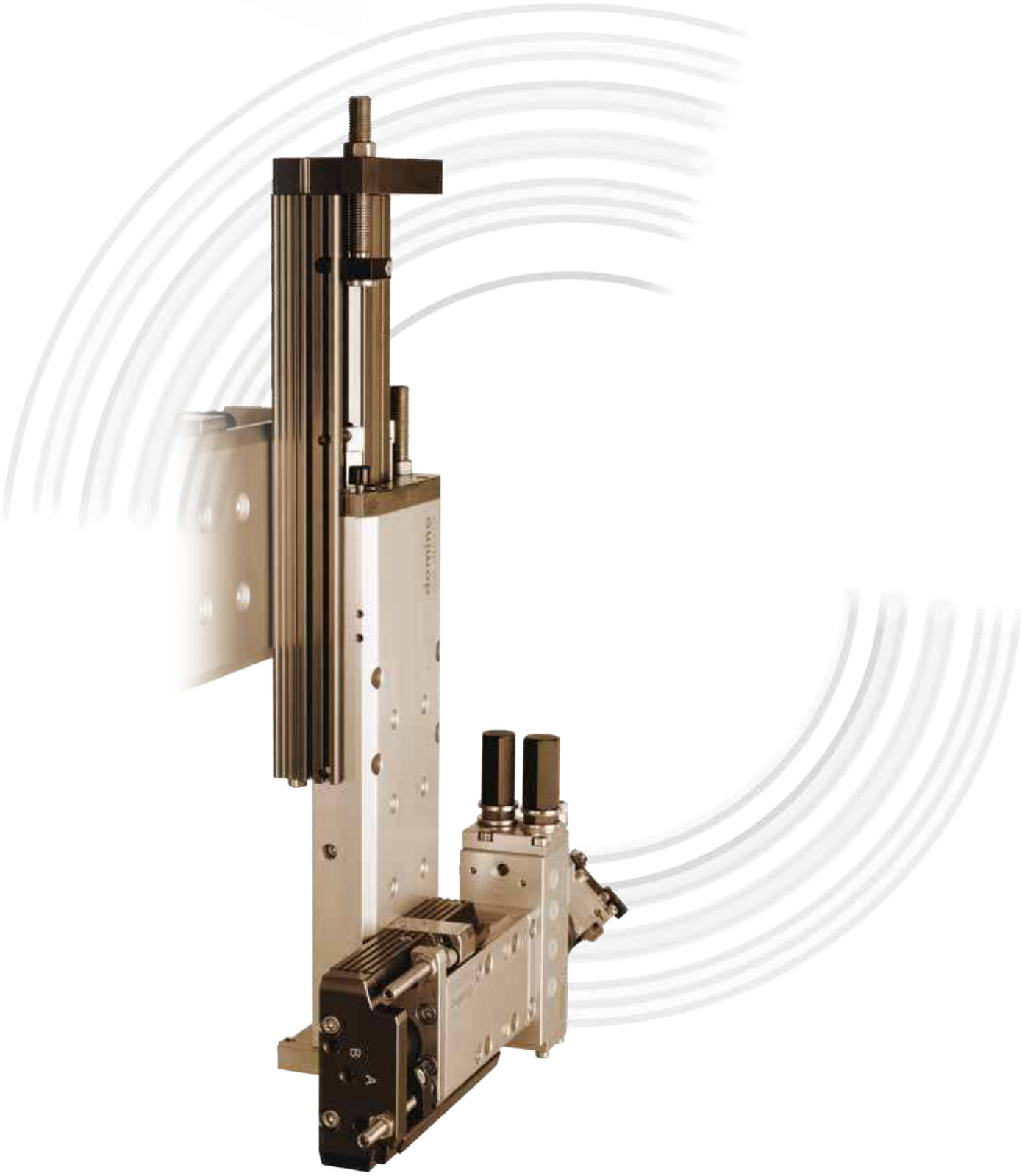

components

Basic Elemets

AW 4 Add-on Bracket

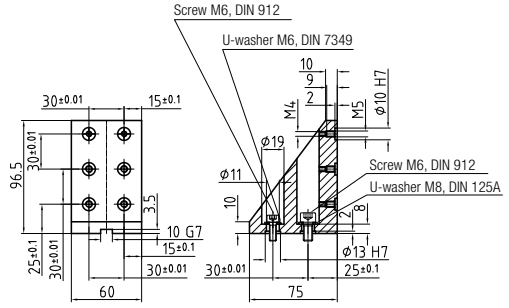

Positive interlocking securing of LM 4 to add-on support.
Can be used vertically with LM 4 as lifting module.
Centering ring Ø10 mm

Designation	Order number
AW 4	300 2396

AW 6/8 Add-on Bracket

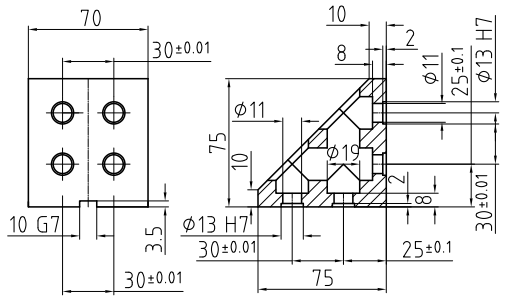

Standard add-on bracket.
Positive interlocking securing of add-on support to baseplate.
Portal axes for add-on support.
Centering ring Ø13 mm

Designation	Order number
AW 6/8	300 2394

AW 6/8-45 Add-on Bracket

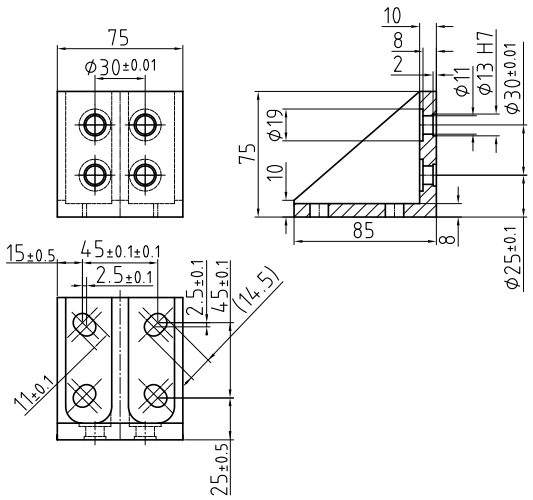

Positive interlocking securing of add-on support to item or Bosch profiles.
Centering ring Ø13 mm

Designation	Order number
AW 6/8-45	300 2393

Basic Elements

AW 10 Add-on Bracket

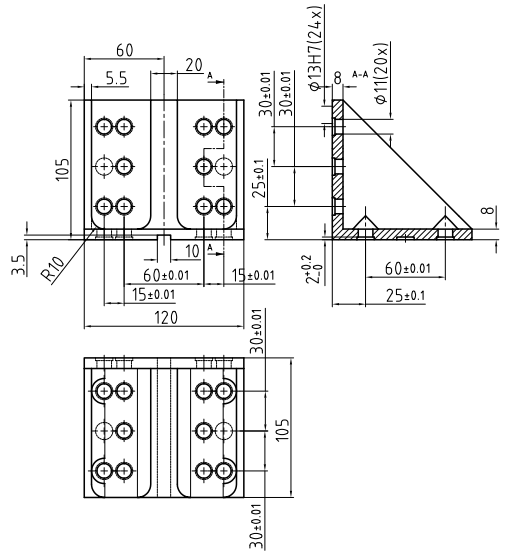

Standard add-on bracket.
Positive interlocking securing of add-on support AT 10 to baseplate.
Portal axes for add-on support.
Centering ring Ø13 mm

Designation	Order number
AW 10	300 2618

AW 5/6 Add-on Bracket

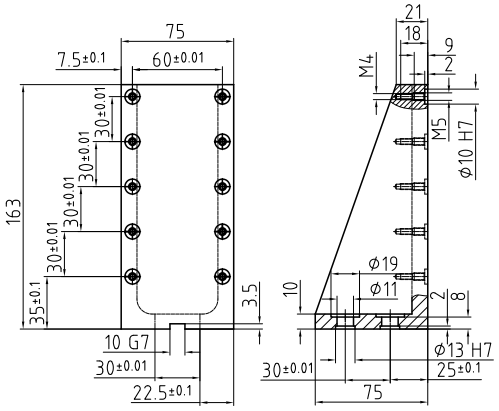

Positive interlocking securing of LM 5/6 to add-on support.
Can be used vertically with LM 5/6 as lifting module.
Centering ring Ø10 or 13 mm

Designation	Order number
AW 5/6	300 2395

AW Add-on Bracket Special

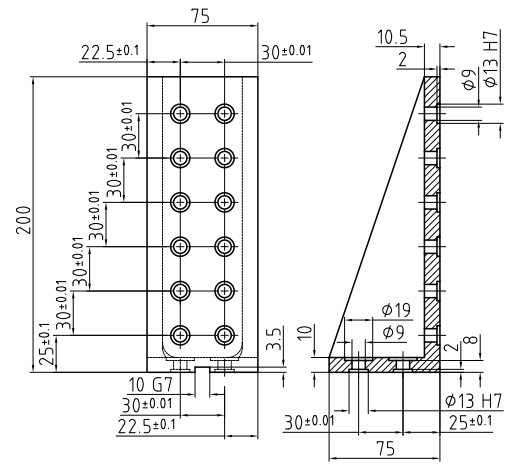

Designation	Order number
AW special	301 6430