domino modul AG

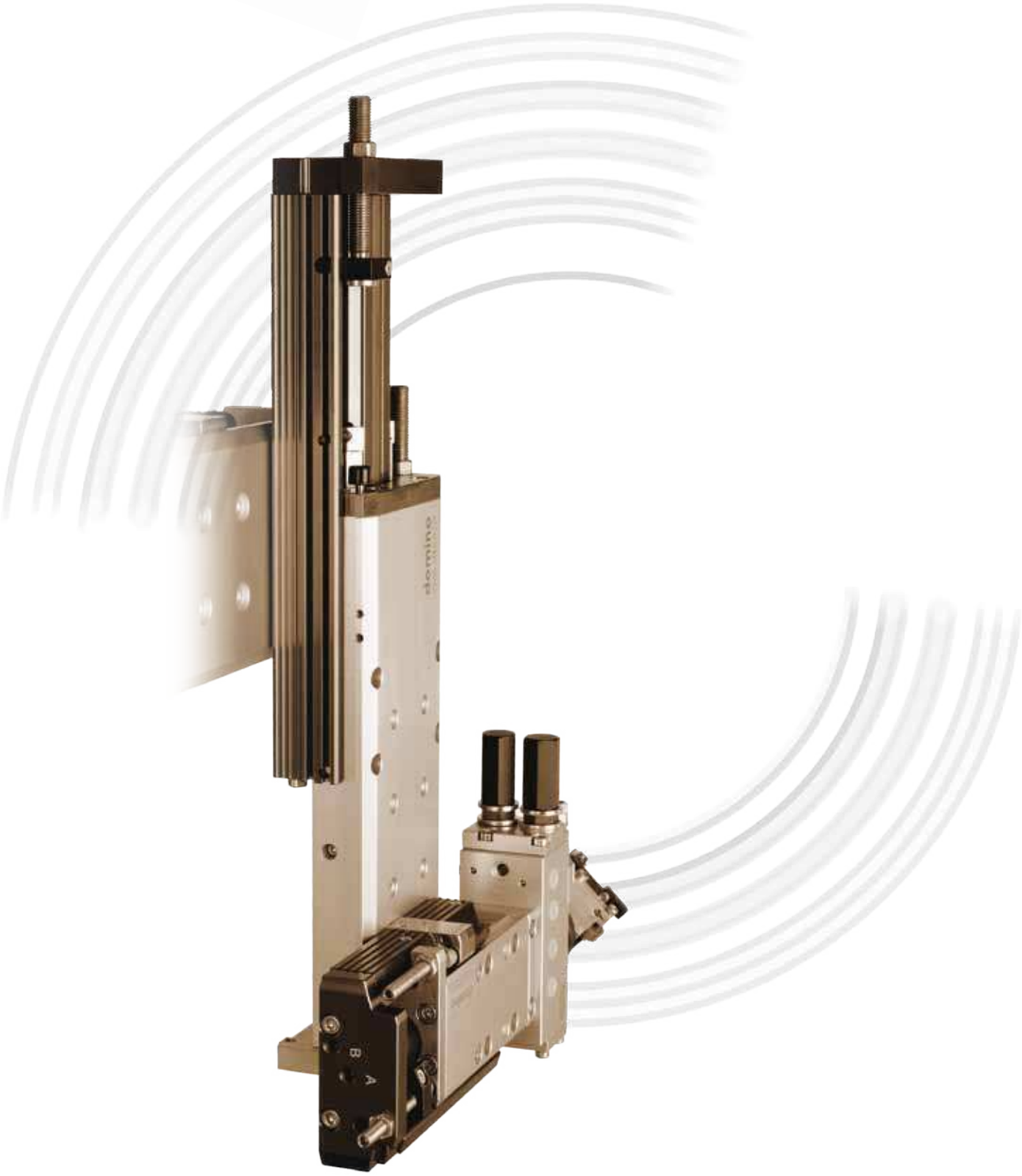

components

Basic Elements

Add-on supports with integrated cable passage for the positive interlocking assembly of Domino Handling Components

AT 6 Add-on Support

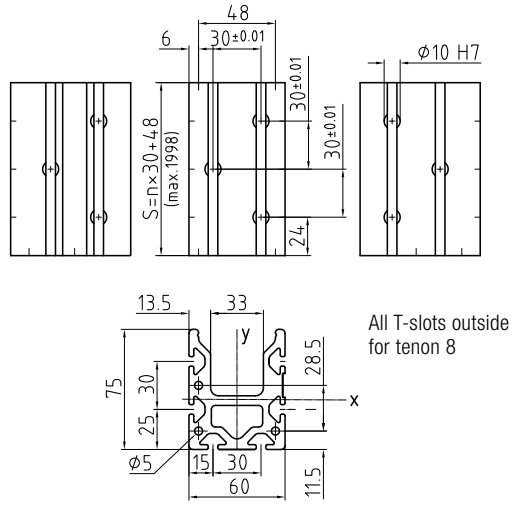

AT 6

A = 17,53 cm² Ix = 72,74 cm⁴ Iy = 75,81 cm⁴ It = 148,56 cm⁴
m = 4,76 kg/m Wx = 24,17 cm³ Wy = 17,036 cm³
Standard length max. 4000 mm, anodized

Designation	Order number	
AT 6	300 4959	
NS 6-M4	300 6026	tenon with M4 thread
NS 6-M5	300 6019	tenon with M5 thread
NS 6-M6	300 6018	tenon with M6 thread
Centering ring Ø10	300 1522	

AT 8 S Add-on Support

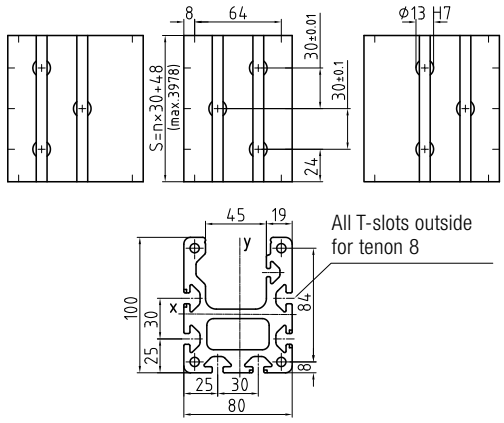

AT 8 S

A = 32,385 cm² Ix = 281,7 cm⁴ Iy = 252,4 cm⁴ It = 535,176 cm⁴
m = 8,796 kg/m Wx = 61,606 cm³ Wy = 49,809 cm³
Standard length max. 4000 mm, anodized

Designation	Order number	
AT 8	300 5250	
NS 8-M5	300 6020	tenon with M5 thread
NS 8-M6	300 6655	tenon with M6 thread
NS 8-M8	300 6656	tenon with M8 thread
Centering ring Ø13	300 1523	

AT 10 Add-on Support

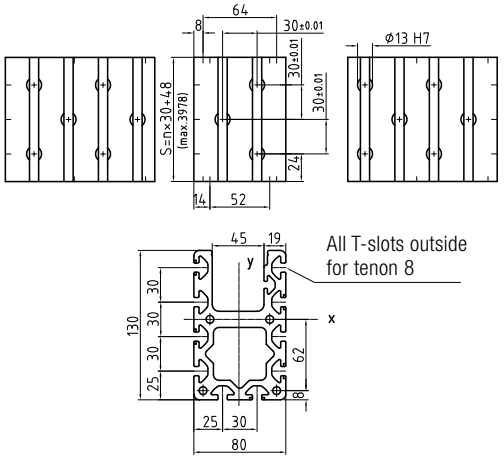

AT 10

A = 38,72 cm² Ix = 537,4 cm⁴ Iy = 296,3 cm⁴ It = 833,69 cm⁴
m = 10,52 kg/m Wx = 74,07 cm³ Wy = 75,79 cm³
Standard length max. 4000 mm, anodized

Designation	Order number	
AT 10	300 5251	
NS 8-M5	300 6020	tenon with M5 thread
NS 8-M6	300 6655	tenon with M6 thread
NS 8-M8	300 6656	tenon with M8 thread
Centering ring Ø13	300 1523	